Black Friday Sale: Get 30% OFF RAKwireless Antennas! Nov 25 – Dec 3. Shop now! X

RAK2560 WisNode Sensor Hub Datasheet

Overview

Description

The RAK2560 WisNode Sensor Hub is a modular sensor ecosystem consisting of the main body and multiple pre-configured sensor probes. It has pluggable and interchangeable probes and supports the integration of third-party sensors. These characteristics make the Sensor Hub an ideal and adaptable solution platform for a wide range of IoT applications requiring environmental monitoring.

The Sensor Hub is housed in a robust, waterproof enclosure with two (2) sensor probe ports for connecting sensors or an external power source, such as a solar panel. It can operate with an external power supply or in full battery mode, depending on the deployment location.

With the use of the WisToolBox app, the Sensor Hub and its sensor probes can be easily configured. The application is available on mobile and desktop.

Product Features

- LoRa 868-930 MHz support
- Based on RAK4630 (MCU: nRF52840, Radio Chip: SX1262)
- RUI3 - based code
- Auto-detection of the power source
- Auto-detection of the Sensor Probes
- 2~4 pcs 3.6 V ER18505 4000 mAh Li-SOCl2 primary lithium batteries
- 12 V_{DC} over power supply or solar panel
- NB-IoT interface module (RAK5860) support (optional)
- Embedded antenna
  - High efficiency (over 75%) LoRa Band 860~930 MHz
  - Support 700 ~ 960 MHz and 1700 ~ 2170 MHz.
- NFC tag for power on and smart connect over BLE
- Prevent theft via the hall effect sensor on the exclusive mounting bracket

- IP66-rated waterproof enclosure
- Sensor ports can host multiple Sensor Probes via Probe Splitters

Specifications

Overview

Main Specifications

Feature	Specification
Wireless technology	Support LoRa end node (915 MHz / 868 MHz) Support Bluetooth for easy setup Support NFC for easy setup
Antenna	1 x internal: high-gain and high-efficiency LoRa antenna (also support NB-IoT) 1 x internal: NFC antenna 1 x internal: Bluetooth antenna
External interfaces	2 x SP11 connector (IP67) for multiple-purpose sensors The SP11 supports a 12 V power adapter and a solar panel kit for external power
Weatherproof design	IP66 rated SP11 connector for professional installation and fast deployment Plastic top (UL-746C), UV-resistant Metal body, die-casted, with solid and good thermal dissipation Internal gasket (UL-94V0)
Power source	Supports the following power source: • +12 V_{DC} at 1 A (12 W) power adapter • 12 V_{DC} solar panel • 4 x ER18505 Li-SOCl2 batteries (4000 mAh)

Feature	Specification
Mounting options	Solid mounting kit for wind speed load of 215 km/h Pole-mount (vertical or horizontal) Wall-mount
Enclosure dimensions	120 x 80 x 39 mm
Surge and ESD	6 kV surge and 8 kV ESD protection
Working environment	-30° C to +60° C Suitable for outdoor and indoor use
Storage temperature	-40° C to +80° C

Dimensions

The dimensions for the body of the Sensor Hub are 120 x 80 x 39 mm. There are two equal physical ports for Sensor Probe—the DC supply and the Probe IO at the bottom of the enclosure.

Figure 1: RAK2560 WisNode Sensor Hub dimensions

Block Diagram

The **RAK2560 Sensor Hub** uses RAK4630 as a core. The One-wire protocol provides easy connection and easy assembly. The device supports two kinds of wireless communication, LoRa, and NB-IoT that are switchable. A hybrid power system provides more possibilities to customize the Hub to correspond to the customer/market demands.

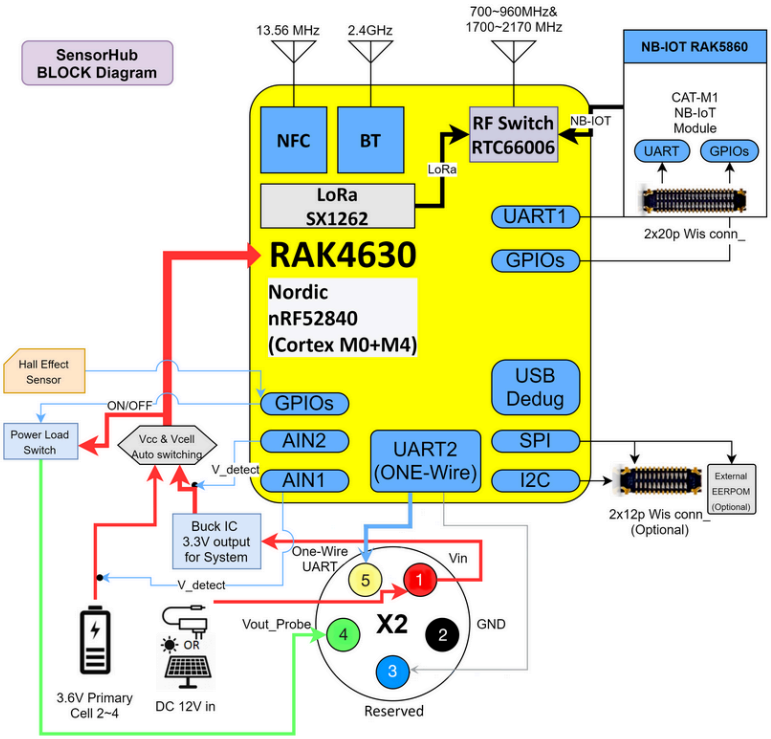

Figure 2: RAK2560 WisNode Sensor Hub block diagram

Hardware

The hardware specification is categorized into five (5) parts. It shows the pinouts of the sensor hub and their corresponding functions and diagrams. It also covers the RF, power supply, and environmental characteristics that include the tabular data of the functionalities and standard values of the RAK2560 WisNode Sensor Hub.

Pin Definition

Each of the two ports has five (5) pins and they are the same for both ports.

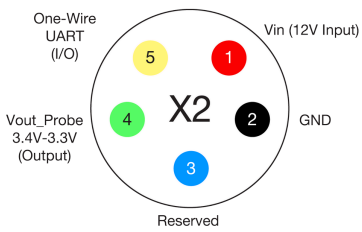

Figure 3: RAK2560 WisNode Sensor Hub pin definition

Pin No.	Name	Type	Description	Remarks
1	Vin	PI	12 V_{DC} supply	Input 5~16 V
2	GND	-	Ground	-

Pin No.	Name	Type	Description	Remarks
3	Reserved	IO	Not defined	Reserved for future use
4	Vcc_Probe	PO	Power supply for the probe	3.3 V_{DC} support mode; 3.4 V battery mode
5	One-wire UART	IO	Communication with probe	Applications

RF Characteristics

Operating Frequencies

The board supports the following LoRa frequency channels, allowing easy configuration while building the firmware from the source code.

Region	Frequency
Europe	EU868
North America	US915
Asia	AS923, AS920
Australia	AU915
Korea	KR920
India	IN865

NOTE

The frequency band parameters vary by region and comply with local regulations. Keep your location in mind when placing an order.

Power Supply

The **RAK2560 Sensor Hub** must be supplied through the 12 V SP11 pins by a DC power supply or 4 x EVE ER18505 3.6 V Lithium 4000 mAh battery and the voltage must be stable.

Power Consumption

Mode	Condition	Min	Typical	Max
Active mode (TX)	The power of TX channel is 20 dBm and 3.6 V supply	110 mA	120 mA	130 mA
Active mode (RX)	TX disabled and RX enabled	7.5 mA	8.55 mA	15 mA
Active mode (idle)	TX disabled and RX disabled. MCU wake up	3.0 mA	3.3 mA	3.6 mA
Sleep mode	Sleep mode	13 uA	15 uA	20 uA

Environmental Requirements

Operating Conditions

Parameter	Min	Typical	Max
Normal operating temperature	–30° C	+25° C	+80° C

Sensor Connection Diagram

The **RAK2560** can support both Sensor Probes and Probe IO in all possible combinations.

> **NOTE**
>
> If you want to add a Probe IO to your setup, the Sensor Hub must be supplied by an external 12 V_{DC} power source.

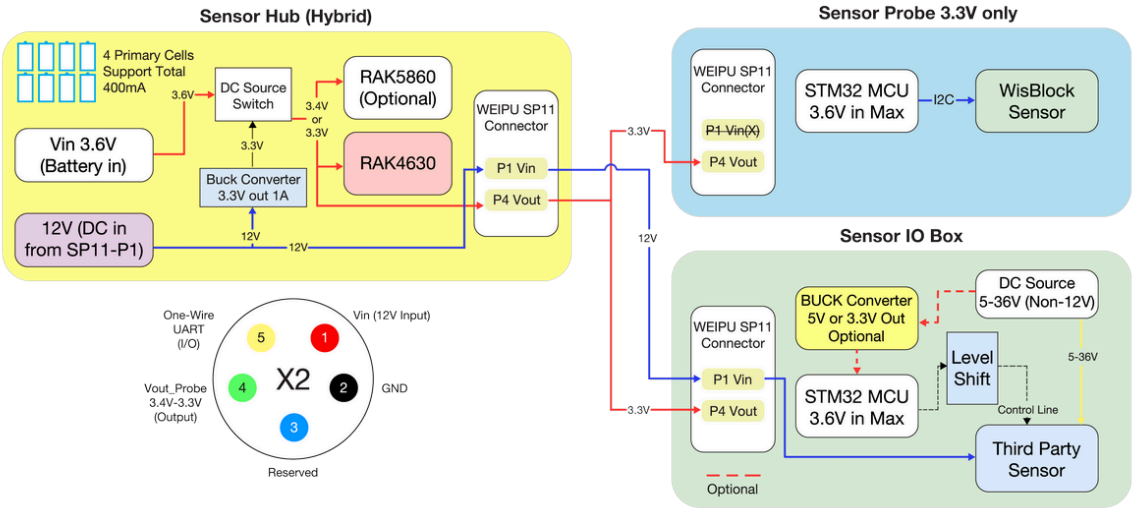

Figure 4: RAK2560 WisNode Sensor Hub connection schematics

Software

Supported Protocol	Description
NFC	For waking up the Sensor Hub via the WisToolBox App
BLE	For pairing the Sensor Hub to a mobile device for configuration via the WisToolBox App
LoRaWAN	For data transfer, provided by the RAK4630 WisBlock LPWAN module
NB-IoT	For data transfer, optional, provided by the RAK5860 WisBlock NB-IoT interface module
One-wire UART	For communication between the Sensor Probe/Probe IO and the Hub

Firmware

Download the latest firmware version of RAK2560 Sensor Hub in the table provided below.

Model	Version	Firmware
RAK2560 Sensor Hub	Release 1.2.9	Download

Certification

Innovation, Science and Economic Development Canada

Home « Installation Guide Probe Datasheet »

LoRa® is a registered trademark or service mark of Semtech Corporation or its affiliates. LoRaWAN® is a licensed mark.

Copyright © 2014-2024 RAKwireless Technology Limited. All rights reserved.